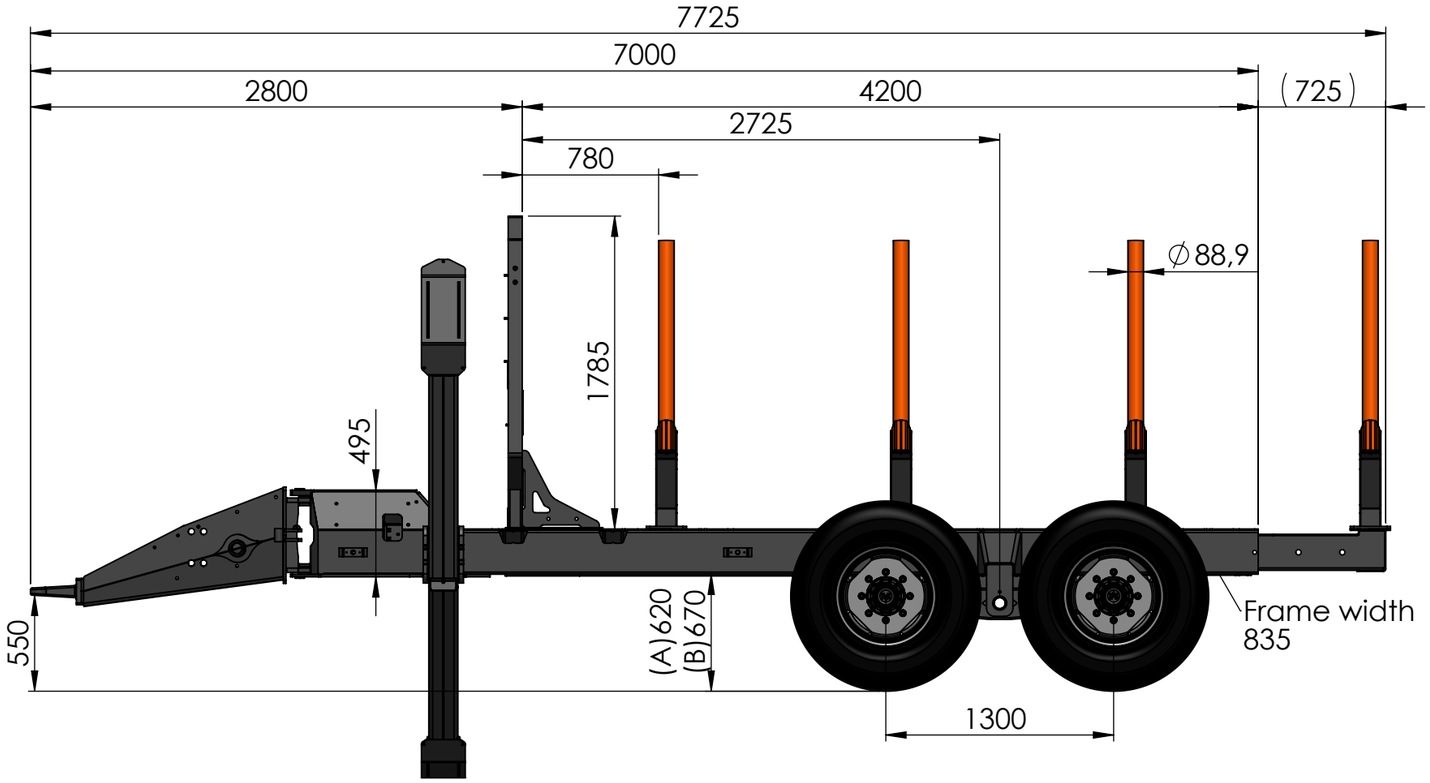

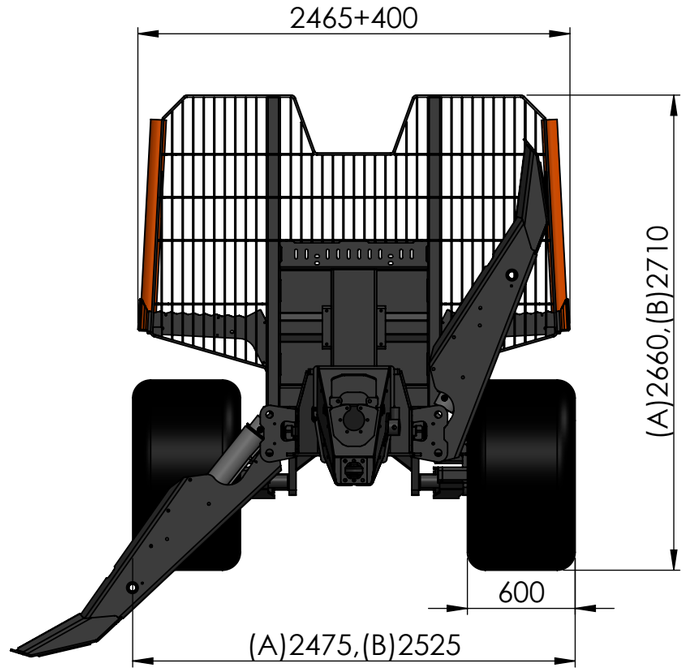

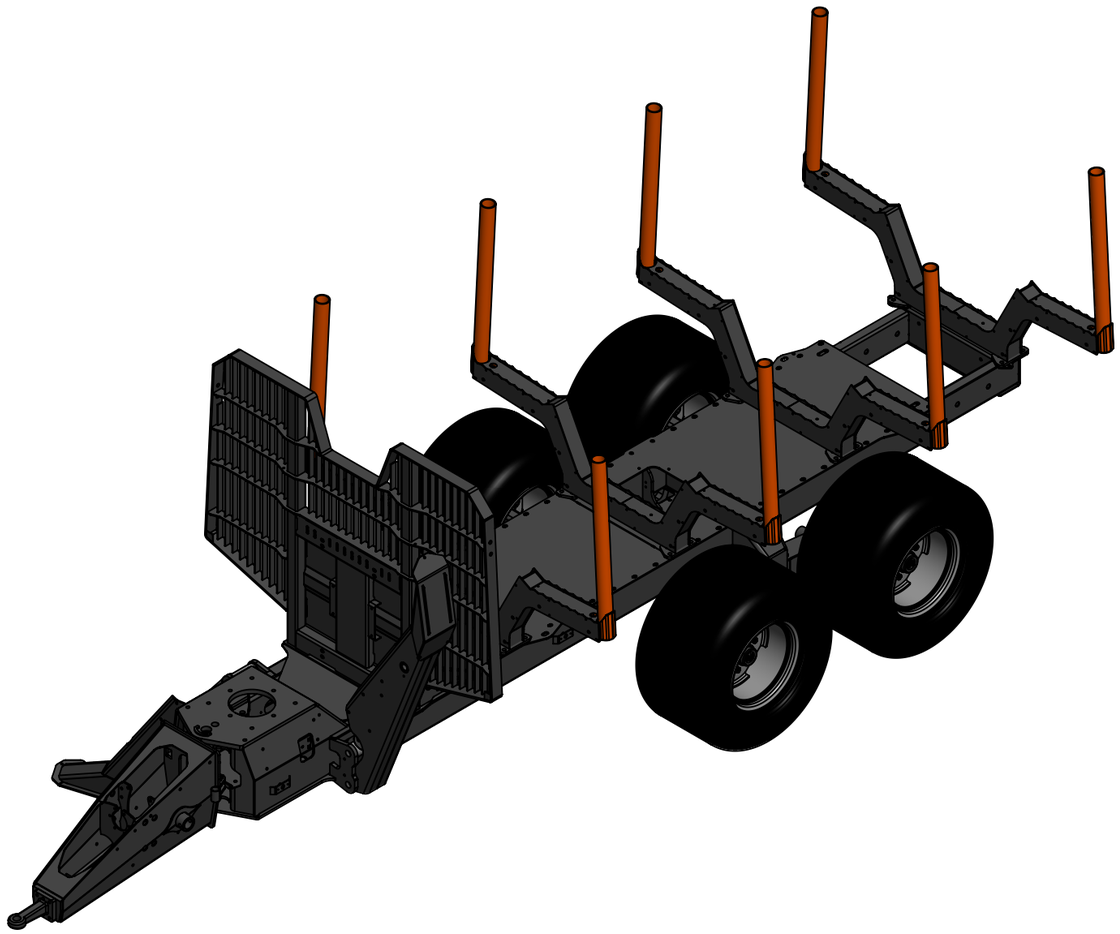

Loading capacity, kg		17000
Total length, mm		7725
Length of loading area, mm		4975
Total width, mm	(A)550/45-22.5	2475
	(B)600/50-22.5	2525
Chassis		2x(250x100x6)
Axles		90x90-8
Loading area, m²		3.0-3.4
Drawbar angle to sides, ±°		30

*Technical data is subject to change without prior notice.

BMF

17T2 PRO FD 50cm